TYPE 3 - PUMP (BOLTING)

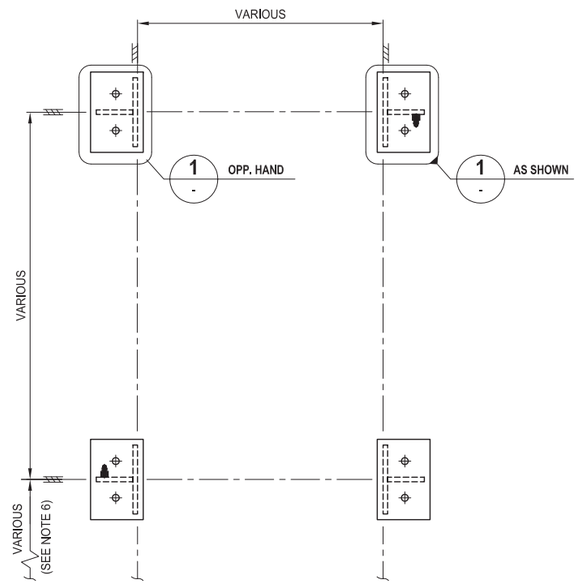

EQUIPMENT SEAT PLAN
(SCALE 1:25)

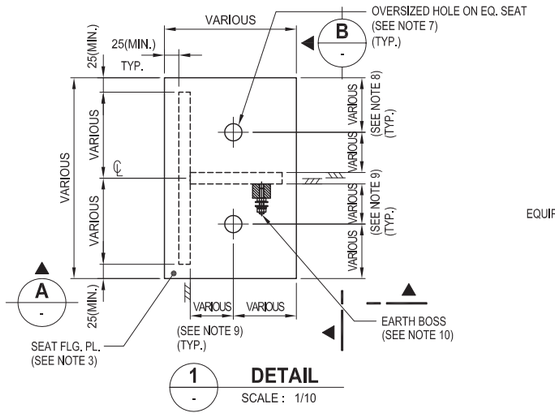

1 DETAIL
SCALE : 1/10

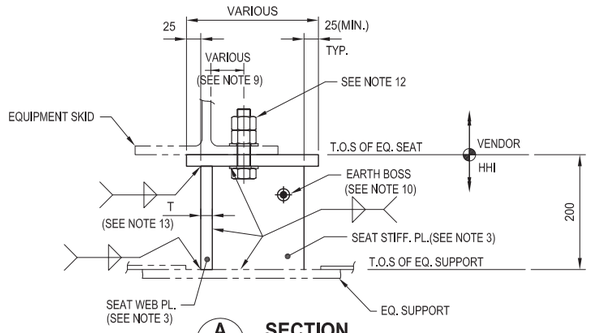

A SECTION
SCALE : 1/10

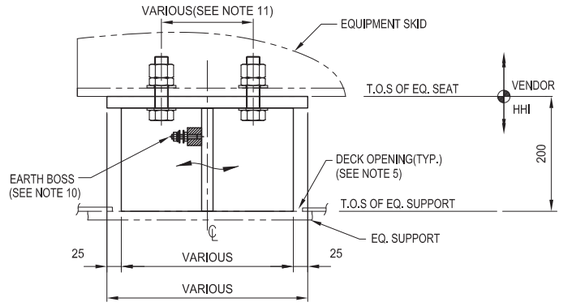

B SECTION
SCALE : 1/10

TYPE 4 - PACKAGE ITEM (BOLTING)

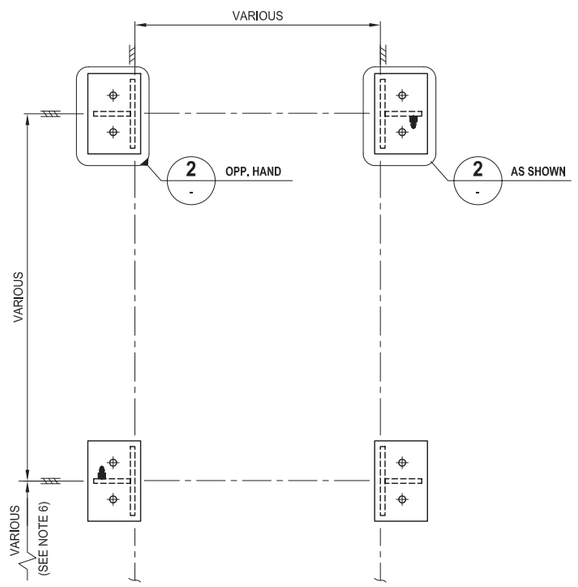

EQUIPMENT SEAT PLAN
(SCALE 1:25)

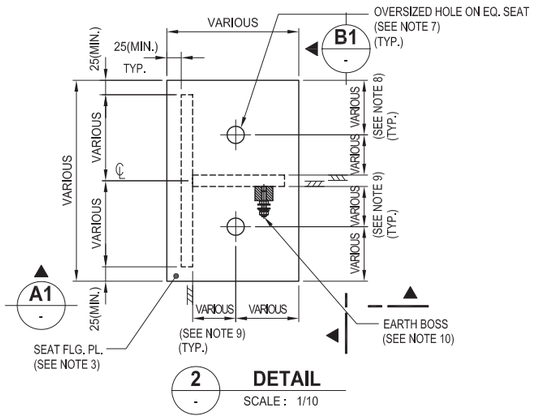

2 DETAIL
SCALE : 1/10

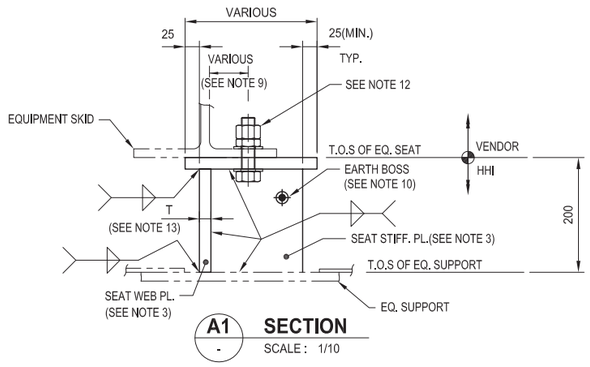

A1 SECTION
SCALE : 1/10

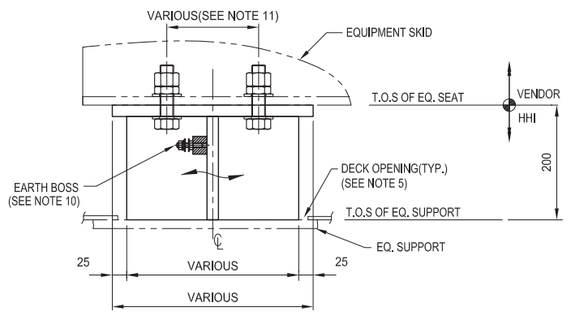

B1 SECTION
SCALE : 1/10

NOTES :

1 - ALL DIMENSIONS ARE IN MILLIMETER (U.N.O).

2 - ALL WELDS SHALL BE CONTINUOUS (U.N.O).

3 - THIS IS ONLY CONCEPTUAL DESIGN. THUS, THE DETAIL DESIGN SHALL BE DEVELOPED DURING THE DETAIL ENGINEERING PHASE. AND THE DESIGN TO BE DEVELOPED SHALL INCLUDE THE MATERIAL, GEOMETRY, THICKNESS & WELD. AND THE DETAILS OF THE BOLT & BOLT HOLE SHALL BE ALSO INCLUDED & DESIGNED BY VENDOR, IF THERE ARE.

4 - IF ANY CONFLICTION BETWEEN THIS CONCEPTUAL DESIGN & DETAIL DESIGN TO BE DEVELOPED, THE NOTIFICATION & DISCUSSION ARE REQUESTED BEFORE FURTHER ENGINEERING PROGRESS.

5 - THE DECK OPENING SHALL BE CONSIDERED FOR EQ. SEAT.

6 - THE QUANTITY OF EQUIPMENT FOOT PRINT SHALL BE DETERMINED DURING THE DETAIL ENGINEERING PHASE.

7 - THE OVERSIZED HOLE ON EQ. SKID & SEAT SHALL BE COMPLIED.

8 - THE MIN. EDGE DISTANCE FROM THE CENTER OF A HOLE TO THE EDGE OF CONNECTED PART SHALL BE COMPLIED WITH AISC SECTION J3 IN ANY DIRECTION.

9 - THE DISTANCE CONSIDERING WELD LENGTH SHALL BE ENOUGH TO ALLOW THE SPACE FOR THE TORQUE WRENCH FASTENER.

10 - THE EARTH BOSS SHALL BE LOCATED ON WHERE DOESN'T DISTURB THE BOLTING.

11 - THE MIN. DISTANCE BETWEEN CENTERS OF HOLE SHALL BE COMPLIED WITH AISC SECTION J3.

12 - THE EQ. VENDOR SHALL DESIGN THE BOLT FOR OVERSIZED SLIP CRITICAL JOINTS. AND THE VENDOR SHALL PROVIDE THE REQUIRED TORQUE OF BOLTING.

13 - THE ECCENTRICITY OF T/2 BETWEEN EQ. SKID AND SEAT SHALL BE CONSIDERED FOR THE DESIGN EQ. SEAT AT LEAST IN ANY DIRECTION DURING DETAIL ENGINEERING.
(T : THICKNESS OF SEAT WEB PLATE)

14 - THE CENTER OF THE EQ SEAT'S WEB AND EQ. SUPPORT'S WEB SHALL BE ALIGNED.

15 - IF SHIM PLATE IS REQUIRED FOR MAJOR EQUIPMENT, THEN COATED STAINLESS SHIM TO BE USED

Revision	Date	Status	Revision Memo	Issued by	Checked by	Approved by
B	19.JAN.21	IFC	Issued For Comment	TKK	IDP	KHW
A	13.JAN.21	IDC	Internal Discipline Check	TKK	IDP	KHW

CONTRACTOR DOCUMENT NO:

HYUNDAI HEAVY INDUSTRIES CO.,LTD.

This document is the property of COMPANY and shall not be disclosed to third parties or reproduced without permission of the owner.

SHK - STANDARD EQUIPMENT SEAT
TYPE 3 & 4

COMPANY Document No.	SHK-ST-DA-801-0151	Sheet 1 of 1	Scale -